McMASTER-CARR®

Low-Voltage Equipment-Cooling Fan

24V DC with Wire Leads, 5" Square x 1.5" Deep Overall, 200 CFM

Delivers tomorrow 7-8 am

$92.00 each
1939K245

Shape	Square
Voltage and Connection	24V DC—Wire Leads
Airflow	200 ft^3/min
Temperature Range	0° F to 145° F
Volume	58 dBA
Current	0.73 amp
Overall	
Height	5" (127 mm)
Width	5" (127 mm)
Depth	1.5" (38 mm)
Frame Material	Plastic
Blade Material	Plastic
Bearing Type	Ball
Mounting	
Fasteners Included	No
Hole Diameter	0.17" (4.3 mm)
Certification	C-UL Recognized Component, CSA Certified, UL Recognized Component
Application	Cooling
CSA File Number	027697_0_000
Power Source	Electric
Thermostat Included	No
UL File Number	E38324
Country of Origin	Hungary
DFARS Compliance	Specialty Metals COTS-Exempt
Export Control Classification Number (ECCN)	EAR99
REACH Compliance	Not Compliant
RoHS Compliance	RoHS 3 (2015/863/EU) Compliant with Exemptions
RoHS Exemptions	6(a), 6(a)-I, 6(c), 7(a), 7(c)-I
Schedule B Number	850110.4060
U.S.–Mexico–Canada Agreement (USMCA) Qualifying	No

Running on 48V DC power or lower, these compact fans fit inside electronics and other small, heat-sensitive equipment to keep things cool. They're also known as muffin fans. Some meet American and Canadian safety standards.

Ball Bearing—Fans with ball bearings generate less heat as they run, so they have a longer life than fans with plain bearings.

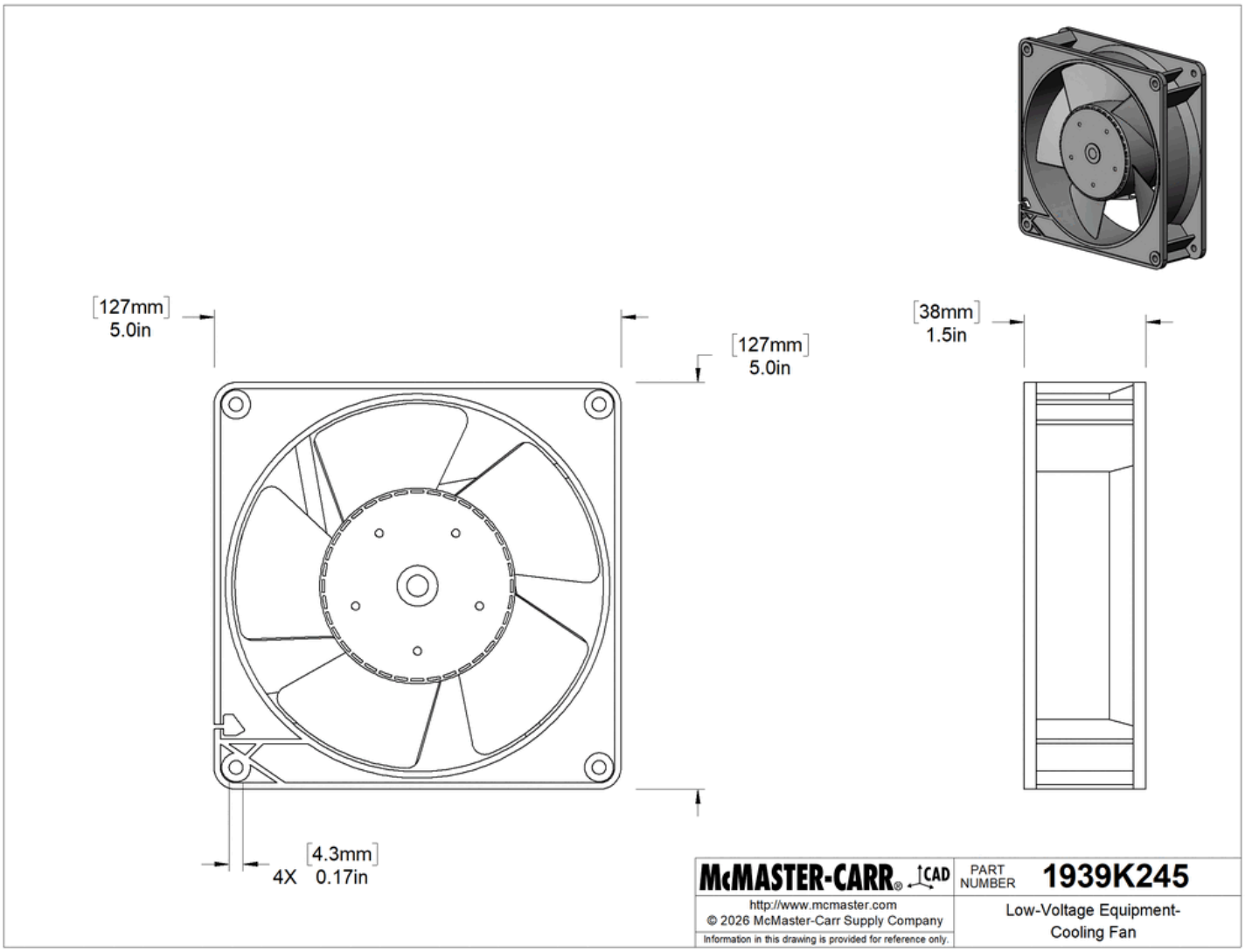

The information in this 3-D model is provided for reference only.